AIRLINE™ LOUVERS

# GS2S45H

## STANDARD MATERIALS AND CONSTRUCTION

**FRAME:** 18-GA. galvanized steel, channel or flanged type.
**BLADE:** 18-GA. galvanized steel. Blades approximately 2⅛" on centers.
**SCREEN:** (When indicated)
½" mesh, 19-GA. galvanized steel (.041").
**CONSTRUCTION:** Riveted and/or welded for maximum service.

## OPTIONS

Frames and Blades of other gauges
Other materials - Stainless steel, Copper, Aluminum, etc.
Finishes - Enamels, Epoxies, etc.
Screens - Insect screen 18/16 aluminum mesh.
-or- ½" flattened aluminum, .051",
-or- ¼" sq. mesh, 18-GA galvanized steel, .047",
-or- ½" sq. mesh, 18-GA stainless steel, .047",
Others available.

## NOTES

1. Nominal deductions will be made to the opening size given.
2. Approximate shipping weight is 5.0 lbs./sq.ft.

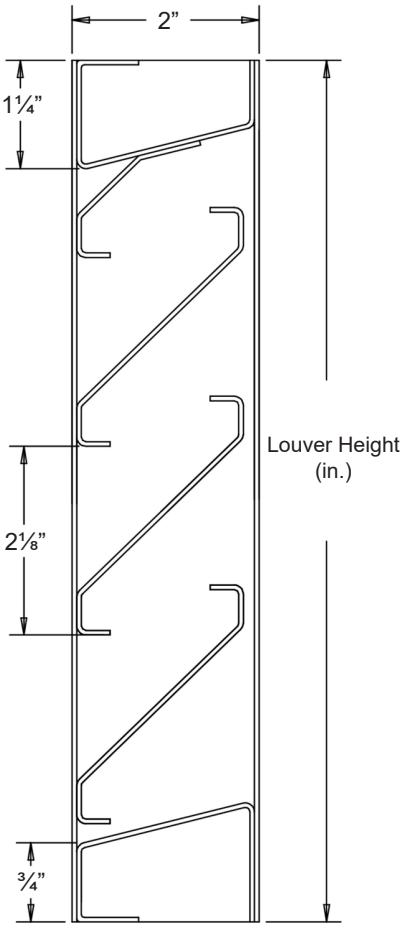


Not to scale.

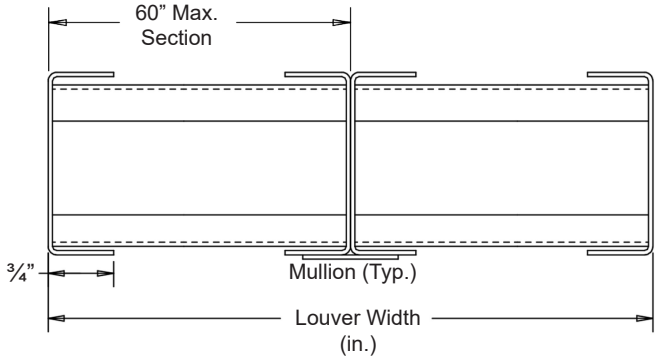


Flange Frame Available

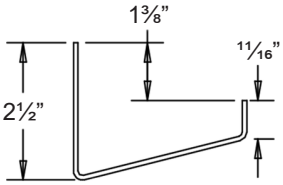


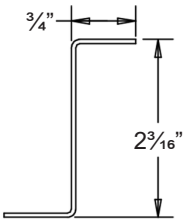


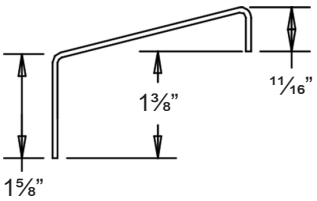


In the interest of product development, Airline Louvers reserves the right to make changes without notice.

| | | | | | | | | | | |
|---|---|---|---|---|---|---|---|---|---|---|
| | | | | | | | | | | |
| | | | | | | | | | | |
| **Item #** | **Qty** | Width | Height | Width | Height | **Mullion** | Type | Location | | |
| | | **Opening Size** | | **Louver Size** | | | **Screens** | | | **Union Made** |
| **Arch. / Eng. :** | | | | | | **EDR:** | | **ECN:** | | **Job:** |
| **Contractor:** | | | | | | | | | | |
| **Project:** | | | | | | **Date:** | | **DWN:** | | **DWG:** |

1020 Prince Frederick Blvd. Suite 305 • Prince Frederick, MD 20687 • Phone: (570) 420-7079 • Fax: (570) 420-7078